AC1L6–03
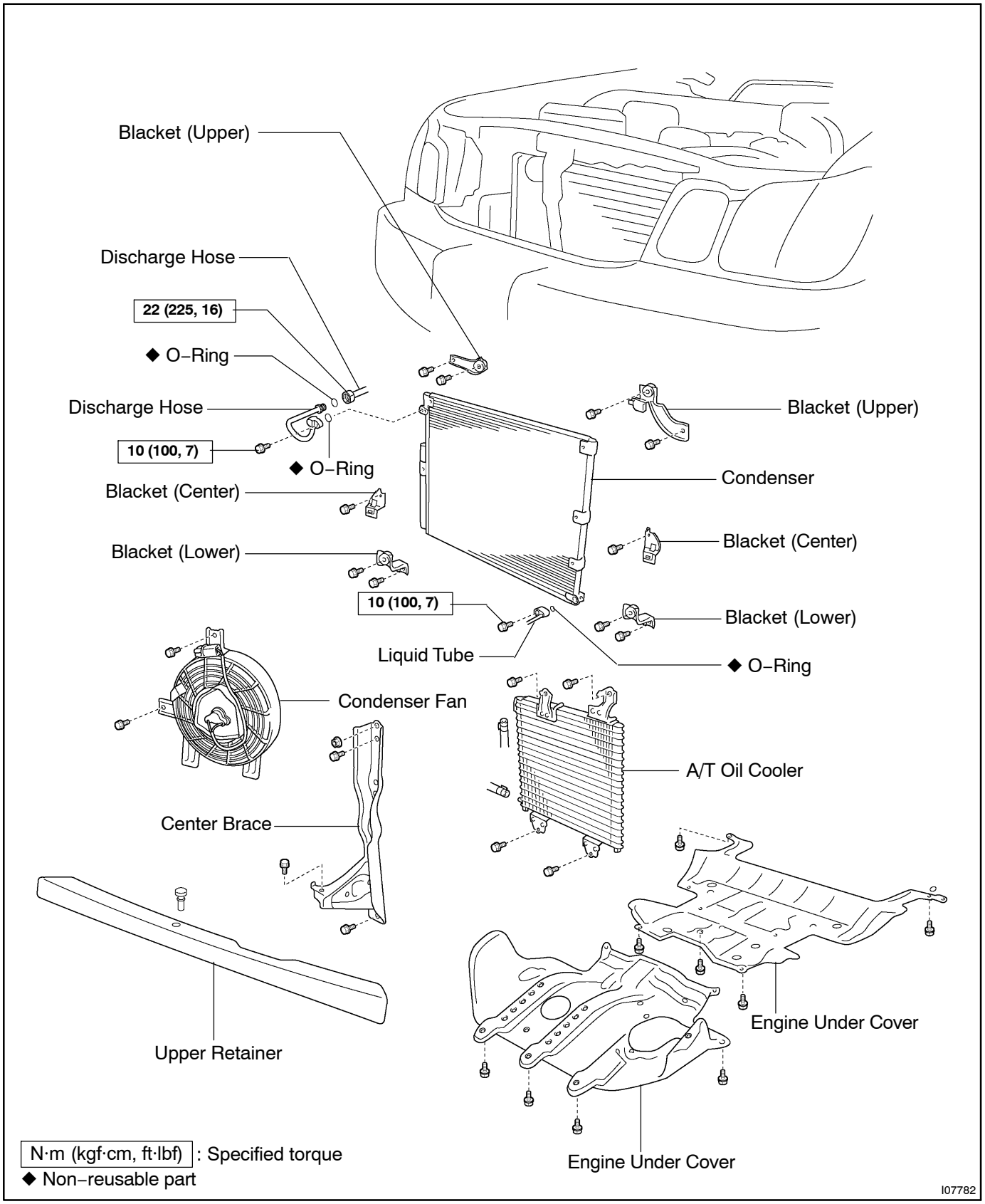
COMPONENTS